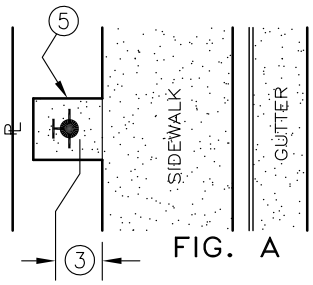

FIG. A

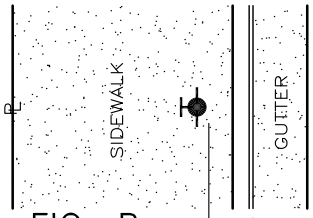

FIG. B

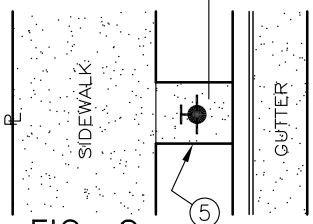

FIG. C

NOTES:

1. Hydrant shall have 4" inlet, tapered IPT female with one 2½" NSHT male outlet, cap and chain with pentagon stem nut: Jones H.P. or approved equal. Outlet shall be pointed toward street. Hydrant shall be rated for 200 psi. design pressure.
2. Hydrant shall be painted with Sherwin Williams B54–Y38 011 base or an approved equal. Color to be purple (Pantone 512), or the riser only shall be sleeved with ⅛" plastic.
3. Hydrant shall be located behind sidewalk if sufficient right–of–way exists (Fig. A), or behind curb (Fig. B, C). If located behind sidewalk, 12" minimum clearance shall be provided between back of sidewalk and outlet cap nut.
4. Standard setback from curb face, 18" to 21". Sidewalk shall have a minimum of 42" of clearspace.
5. When located in unpaved area, hydrant installation shall include 4' x 4' x 6" minimum P.C.C. pad doweled into curb and sidewalk, #4 @ 18" o.c.
6. Hydrant shall be installed to provide 3" min. to 4" max. clearance between underside of flange and sidewalk surface, and shall have ⅝" x 3½" drilled break away bolts installed, with nuts on top of flange and bolts filled with silicone or butyl caulk. Hydrant assembly shall include 6" x 4" reducer and 4" DIP spool FLG x 4" IPT male
7. Thrust block, Class 3 P.C.C., shielded from flanges and bolts.
8. Tracer wire shall be brought to the surface with a minimum of 18" above finished grade. See Eng. Std. #6340 and Trench Details.

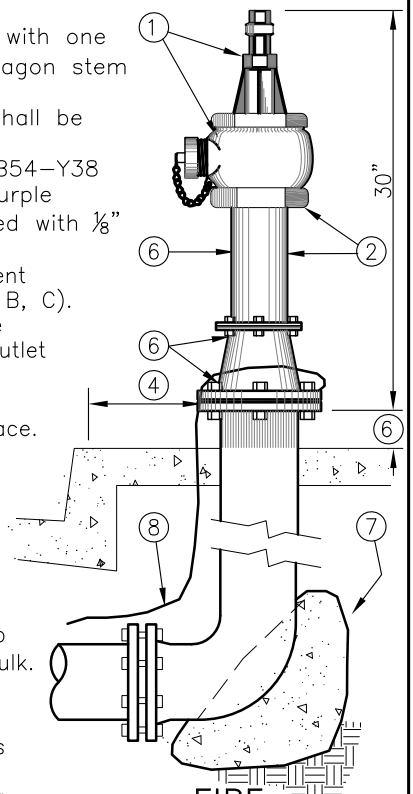

FIRE HYDRANT

NOTES (cont'd):

9. Cut–in tee–M.J. x M.J. x Flange. If regular line run tee is used, a swivel x solid adapter (pup) shall be used (see Engineering Standard #6320)
10. Gate valve, Flange x M.J., resilient seated with fully–encapsulated gate, epoxy–coated inside & outside, full–size waterway, open to the left, non–rising stem with O–ring seals, AVK, CLOW F–6100, or approved equal, and shall conform to AWWA Standard C–509.
11. See Egr.Std. #6340 for valve, valve well & collar details.
12. Tapping sleeve –ROMAC SST–stainless steel, or approved equal
13. Laterals shall be Ductile Iron pipe, 6" diameter, Class 52, sleeved with purple polyethylene warning encasement (Christy's Polywrap, or equal).
14. Plastic warning tape, 3–inch min. width, with black printing on a purple field having the words "CAUTION: RECYCLED WATER – DO NOT DRINK", installed in trench backfill per Std. 6020, 6025, 6030

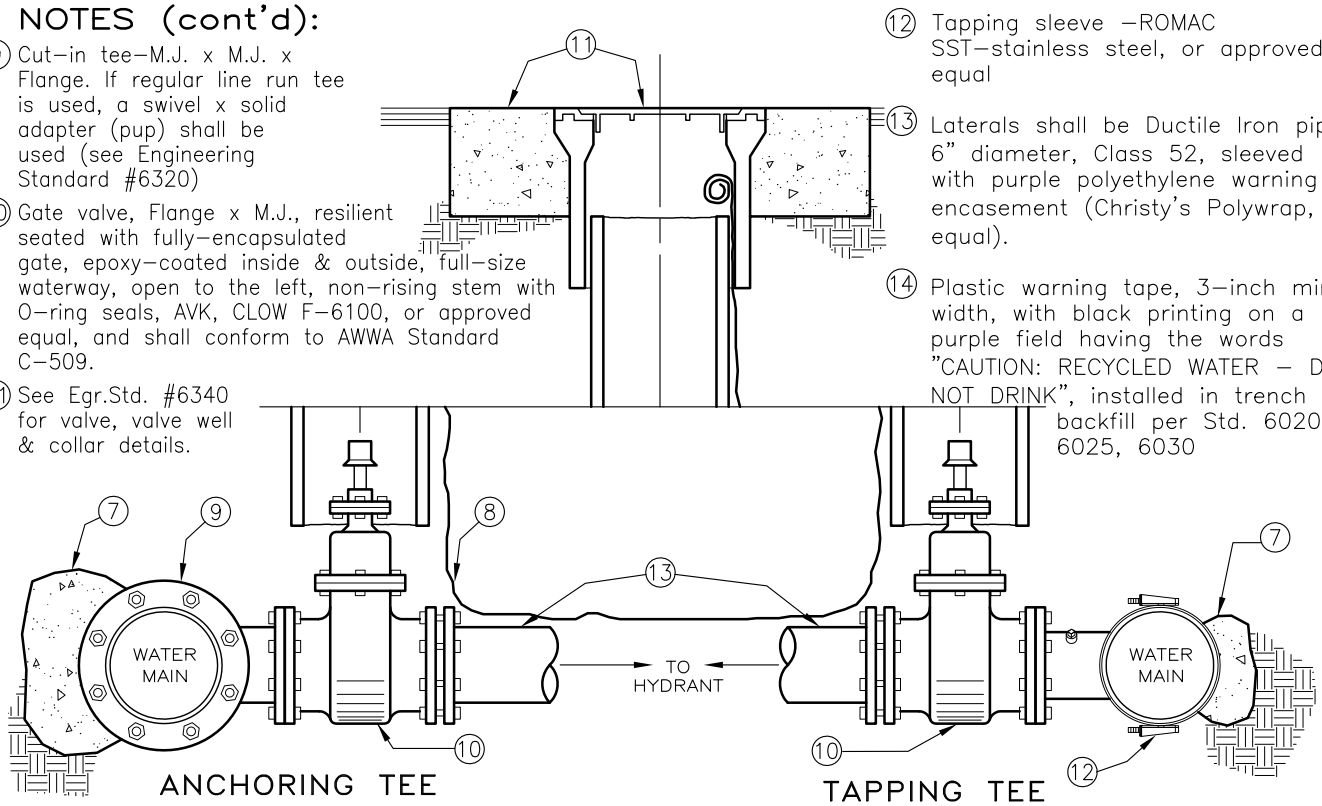

ANCHORING TEE

TAPPING TEE

REVISIONS	BY	APP	DATE
New Standard	*SR*	*BL*	*3–06*
Revised note 8	*MH*	*BL*	*11–09*
STANDARD CURRENT AS OF:	January 2010		

city of san luis obispo

RECYCLED WATER HYDRANT ASSEMBLY

6315