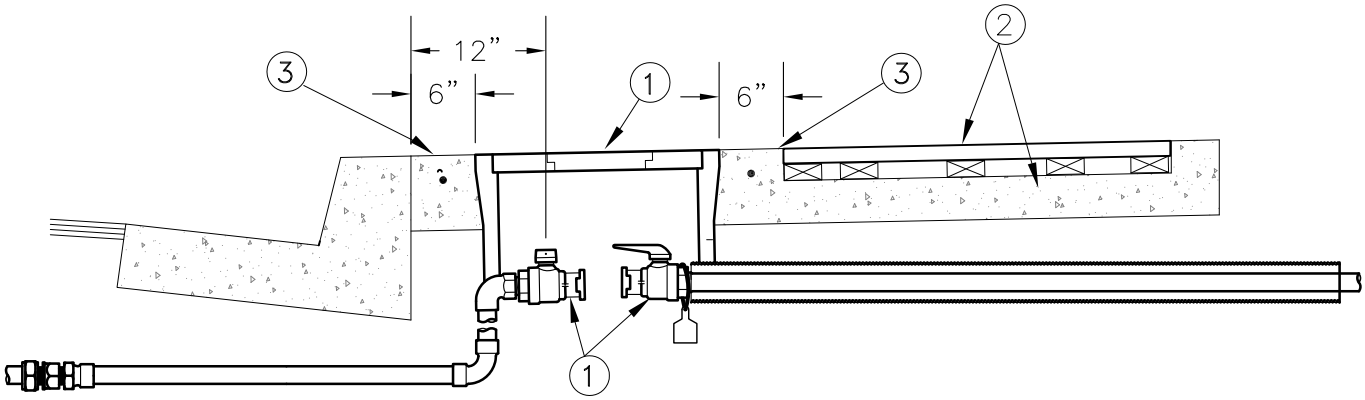

1. Refer to City Engineering Standard 6210 for all other water service details.
2. Refer to City Engineering Standard 4140 for Boardwalk details.
3. Provide 6” collar around meter box with #4 rebar all around meter box – 3” clear top and and sides. In case of manifolds/multiple meter boxes, provide 6” collar around outside perimeter of all boxes.

REVISIONS	BY	APP	DATE
New Standard	*BL*	*DVB*	*10–08*
STANDARD CURRENT AS OF:	January 2010		

city of san luis obispo

WATER SERVICE
for use in boardwalk

6215